AXOR

hansgrohe

AXOR Edge
Single lever basin mixer 280 for wash bowls with push-open waste set
Surfaces: **Chrome** Article Number: **46030000**

Description

product features

- consists of: single lever basin mixer, waste set
- ComfortZone 280
- projection 180 mm
- normal spray
- flow rate at 3 bar: 4.6 l/min
- ceramic cartridge
- temperature limitation adjustable
- suitable for continuous flow water heaters
- push-open waste set G 1¼
- material waste set: metal
- connection type: G ⅜ connections
- connection dimension: DN15

Technology

Air Power | Eco Smart | Comfort Zone

Design awards

reddot award 2019
best of the best

GERMAN DESIGN AWARD WINNER 2020

Product image

Scale drawing

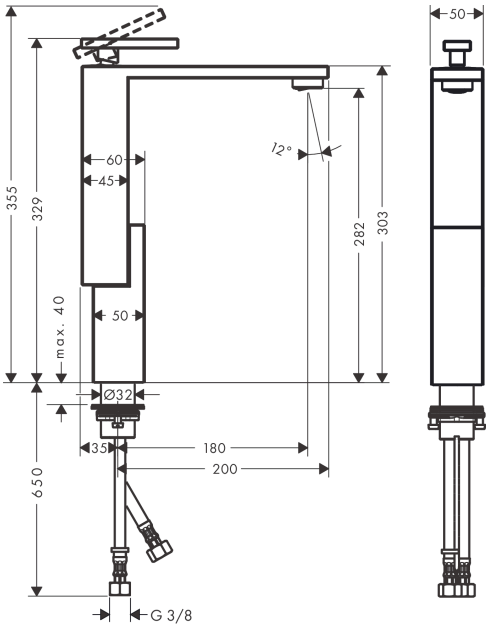

Flowchart

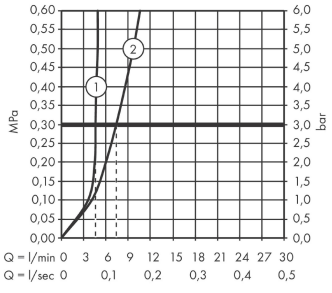

① With flow limiter
② Without flow limiter